Identification Guide to the CLASP Building System

© CLASPConsortium

The following document, extracted from the CLASP Archive, is useful to the surveyor when identifying the Mark of a CLASP buiding. Further information can be obtained from Scape.

Scape System Build Limited
4th Floor Pearl House
5 Friar Lane
Nottingham
NG1 6BT
T: (0115) 958 3200
F: (0115) 958 3232
E: general@scapebuild.co.uk
W: www.scapebuild.co.uk

Scape System Build Ltd is a Local Authority Controlled company whose shareholders are Derby City, Derbyshire County, Gateshead, Nottingham City, Nottinghamshire County and Warwickshire County Councils

Scape System Build Ltd is a trading company for the CLASP Consortium

Company Registered in England
Reg No : 05660357. As office address

Contents

- Introduction
- CLASP Mark 2 - 1958/60
- CLASP Mark 3 - 1960/62
- CLASP Mark 3b - 1962/65
- CLASP Mark 4 - 1965/69
- CLASP Mark 4b - 1969/72
- CLASP Mark 5 - 1972/84

Introduction

This guide is intended to show CLASP owners and their staff or consultants, the differences between the various marks, relating this to the dates the changes that were made and, where relevant, how elements developed.

It is not intended to be a history of the CLASP system, more of a working document. Each section concentrates on the visible elements; windows, eaves, internal finishes, etc., allowing easy identification of the mark. Important differences are emboldened.

THE CLASP SYSTEM

The basis of the CLASP system is the steel frame. This is planned on a structural grid which in turn is governed by a basic module dimension.

In Mark 2, Mark 3 and Mark 3b, the module dimension is 4" and is mainly used in multiples of 10. ie 3'4", 6'8 and 10'0".

In Mark 4 and Mark 4b, the 4" module is retained, but is mainly used in multiples of 9, ie 3'0", 6'0" and 9'0". An additional 1'0" unit was available to tie in with the elevations on earlier buildings.

The change to metric in Mark 5 meant that the module dimension became 100 mm with a structural grid of 900 mm x 900 mm and a planning grid of 300 mm x 300 mm.

In CLASP 6, the module dimension and the planning grid are as for Mark 5, but the structural grid has-been increased to 1800 mm x 1800 mm.

On Mark 2, Mark 3, Mark 3b, Mark 4 and Mark 4b, the preferred floor to ceiling heights are 8'0" and 10'0", although increased heights are found in halls, sports facilities etc. The Mark 5 and CLASP 6 preferred floor to ceiling heights are 2.4 m and 2.7 m.

The first complete CLASP project was the Bancroft Lane School (now Intake Farm Infants) Mansfield, Nottinghamshire, built in 1956.

This school and the projects constructed in the 1957/58 pilot programme in Nottinghamshire, Coventry City and Leicester City, might well be regarded as CLASP Mark 1. However, the Mark 1 designation was not used officially, as the system was at an early stage of development with each Authority producing their own drawings.

The first official designation is Mark 2 covering approximately the period 1958/60.

EXTERNAL ELEMENTS

Windows: Good quality timber - painted.
Large range of frame heights and configurations. Frames brought to site ready assembled, in up to storey height units.
Opening Lights:
Side hung casements with espagnolette bolts.
Top hung vents with some louvres.

Cladding: Horizontal concrete units, either 1'4" or 8" deep and 6'8" or 10'0" long.
Tile hanging.
Timber boarding.

Eaves: **Projecting eaves** with timber fascia
R.w.p.'s external
Aluminium pressing as edge trim to top of fascia.

INTERNAL ELEMENTS

Ceilings: Fibrous plaster ceiling tiles used extensively.
Plasterboard on an aluminium and timber suspension system available as an option.

Partitions: Bellrock partitions, a proprietary plaster based partition system.
Paramount partitioning, a proprietary plasterboard based partition system, was also used.
Toilet partitions often site-fabricated rather than a factory fabricated system.

CLASP MK2 - WINDOW PROFILES

HEAD SECTION

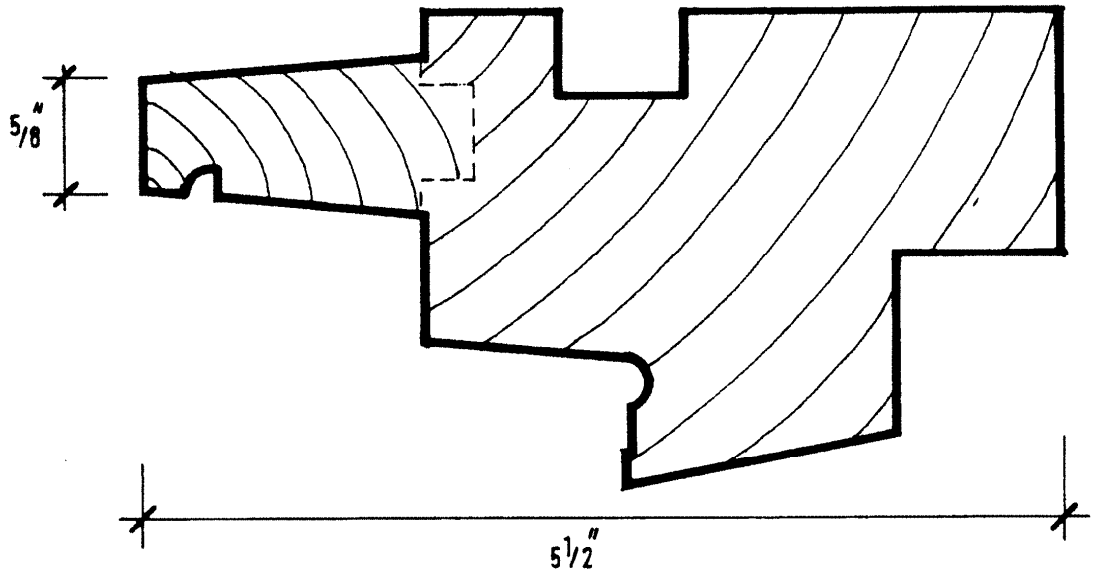

CILL SECTION

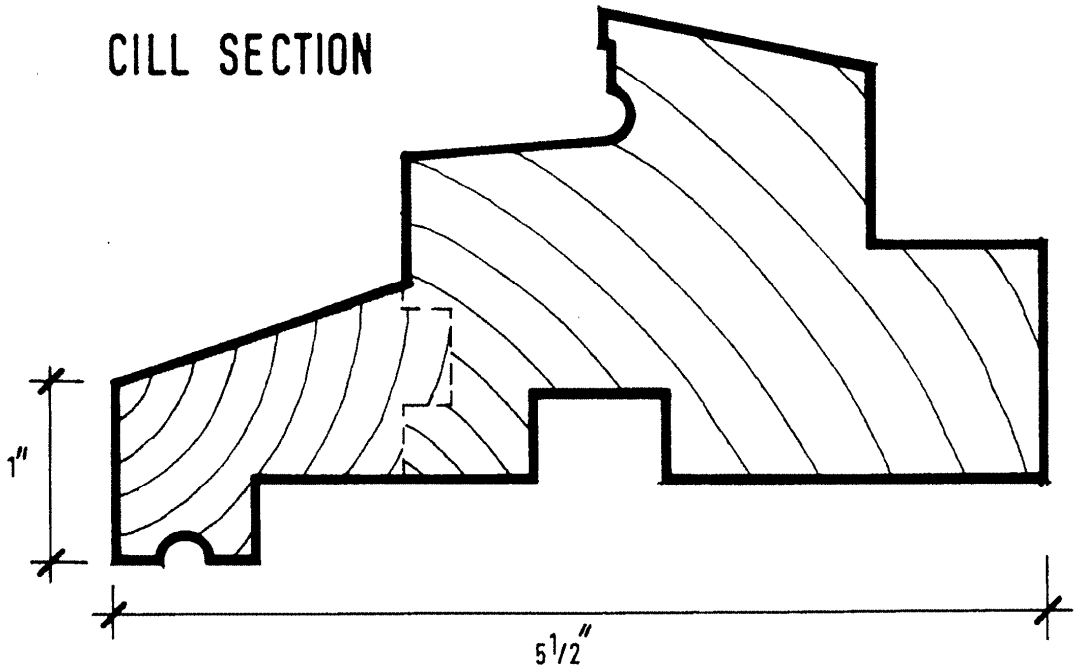

CLASP MK2 - WINDOW PROFILES

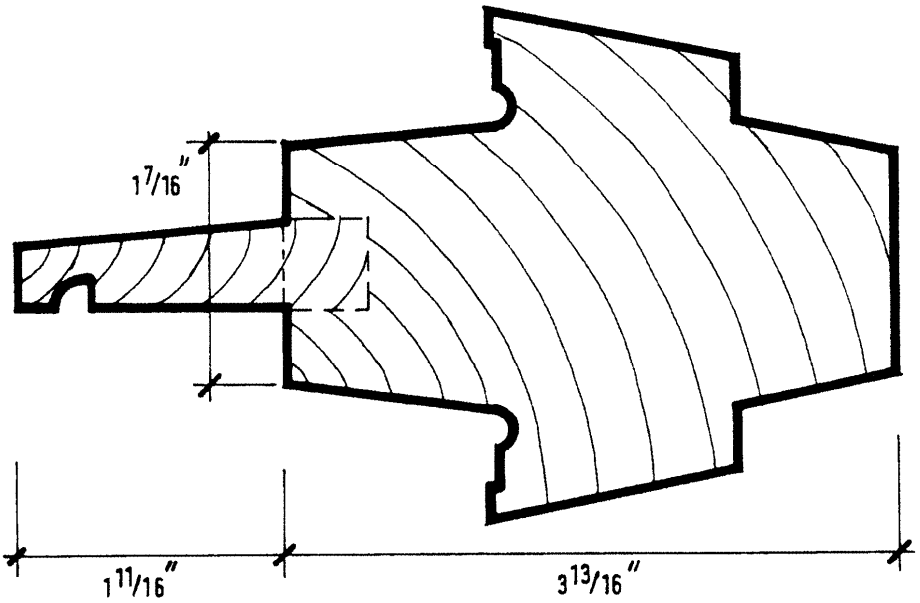

LARGE TRANSOM SECTION
DOOR JAMB SECTION
HEAVY MULLION SECTION

SECTION USED WITH OTHER LIPPING SECTIONS AND WITHOUT LIPPING OR REBATE

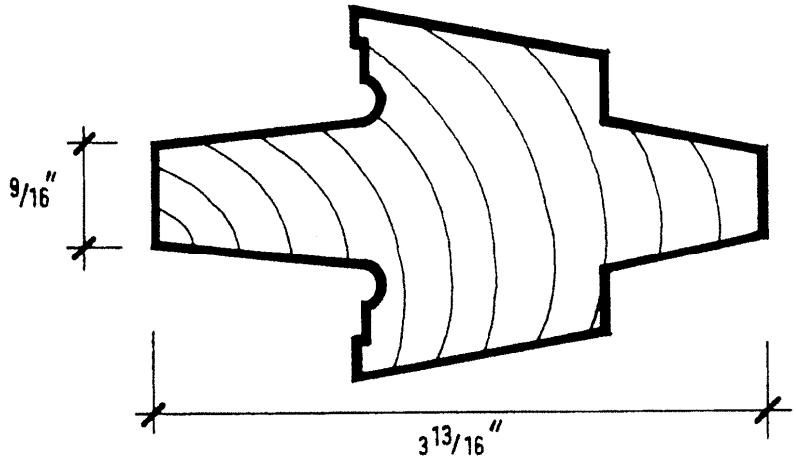

MULLION SECTION
TRANSOM SECTION

CLASP MK2 - WINDOW PROFILES

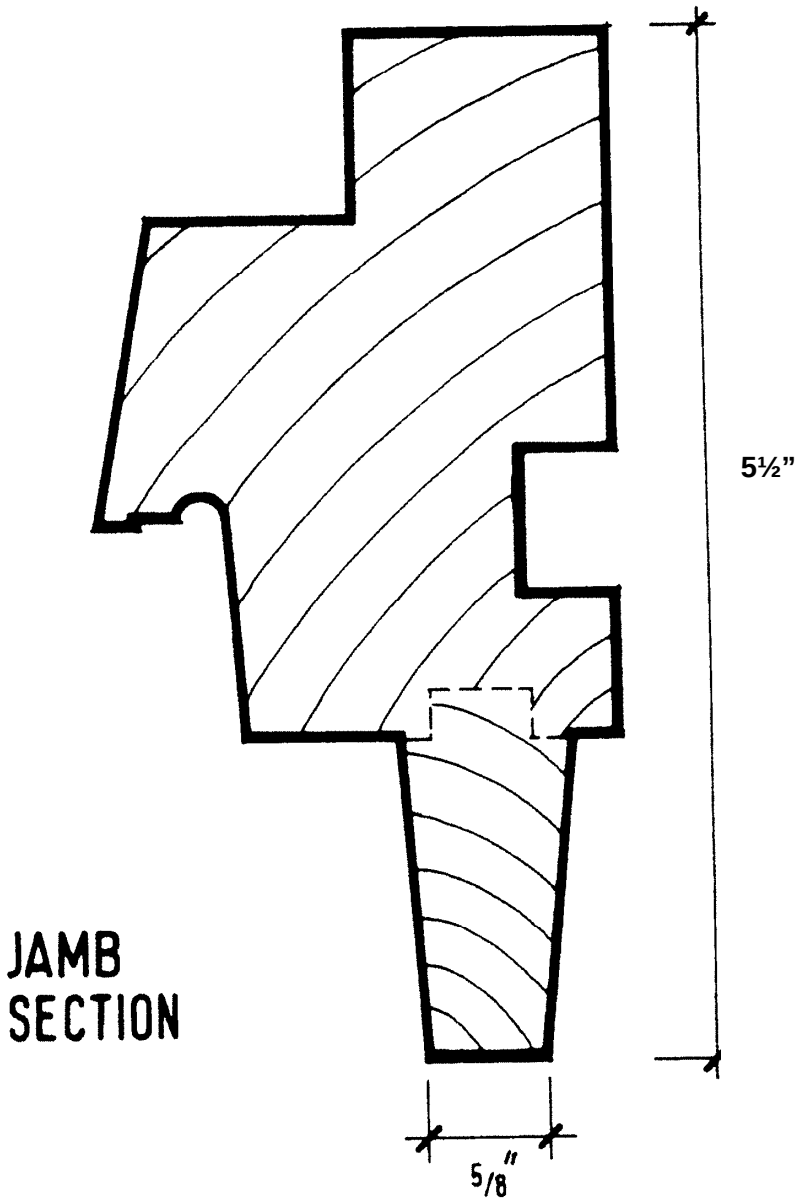

CLASP MK2 - WINDOW PROFILES

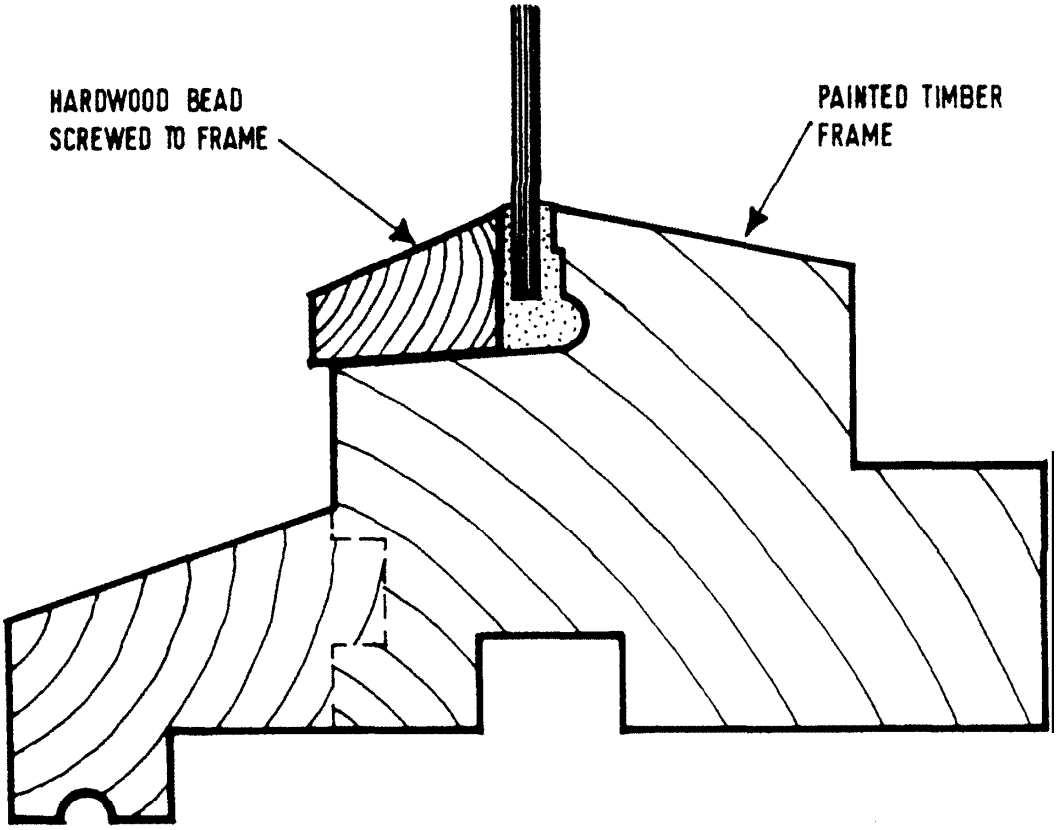

CILL SECTION SHOWING
GLAZING SYSTEM

CLASP MK2 – EAVES DETAIL

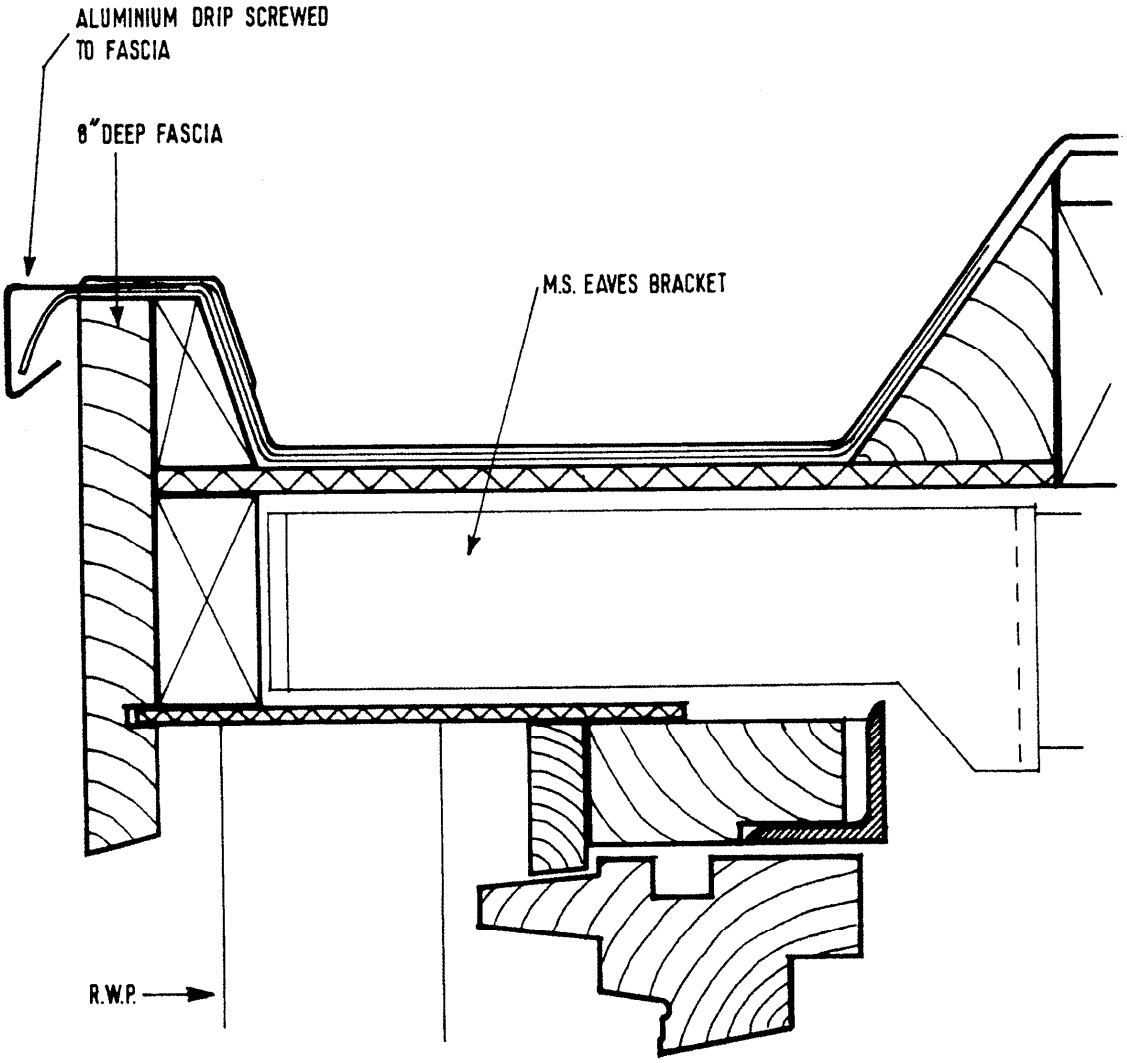

TYPICAL SECTION THROUGH OVERHANGING EAVES

CLASP MARK 3 - 1960/62

Note: A number of early Mark 3 projects had some Mark 2 details. The most obvious is the use of the Mark 2 projecting eaves on Mark 3 buildings. Care should be taken with Mark 2 and early Mark 3 buildings - if in doubt, consult the CLASP Development Group.

EXTERNAL ELEMENTS

Windows: Timber - painted.
Frames site assembled from a number of factory-made units, such as fixed light units, opening light units or solid panel units. These were bolted together by the main contractor. Large number of frame heights, but fewer configurations than with Mark 2.
Opening Lights:
Horizontal Sliding Windows in mill finish aluminium.
Ventilators were mainly louvres.

Cladding: Concrete cladding units:
Early Mark 3 - horizontal units as for Mark 2.
Late Mark 3 - units were either 3'4" or 2'8" wide by 2'0" deep, with smaller units under windows or eaves.
Tile hanging was used extensively with a wide variety of tiles available.
Timber boarding.

Eaves: **Timber Fascia set back in-line with face of building**
R.w.p.'s external.
Aluminium angle as edge trim to top of fascia.

INTERNAL ELEMENTS

Ceilings: Fibrous plaster tiles and plasterboard as for Mark 2, with Asbestolux available as an option.

Partitions: Paramount partitioning used extensively.
Asbestolux and timber boarding also used, mainly as internal lining to external walls.

CLASP MK3 - WINDOW PROFILES

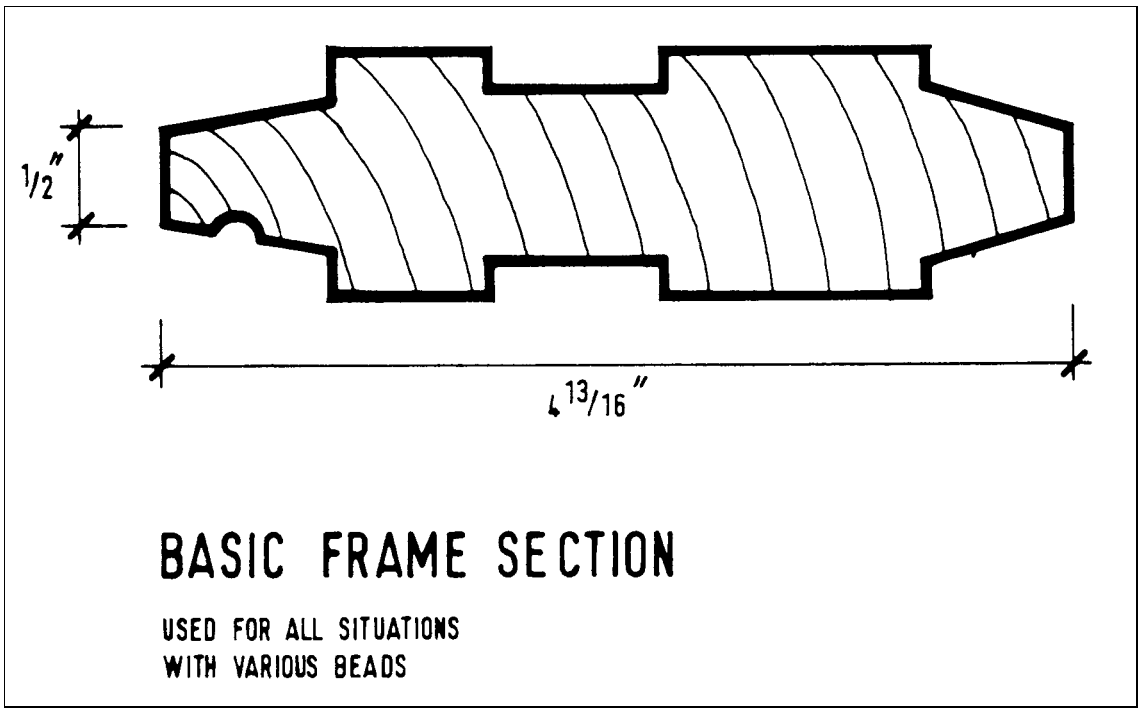

CLASP MARK 3 - WINDOW PROFILES

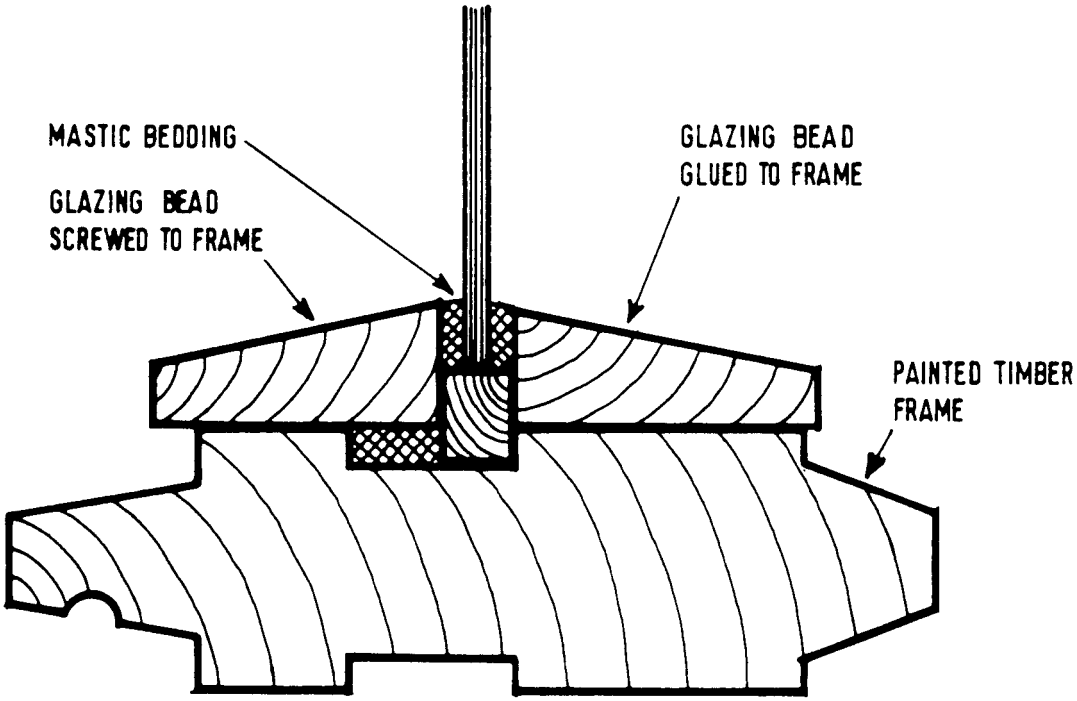

CILL SECTION SHOWING
GLAZING SYSTEM

CLASP MARK 3 - EAVES DETAIL

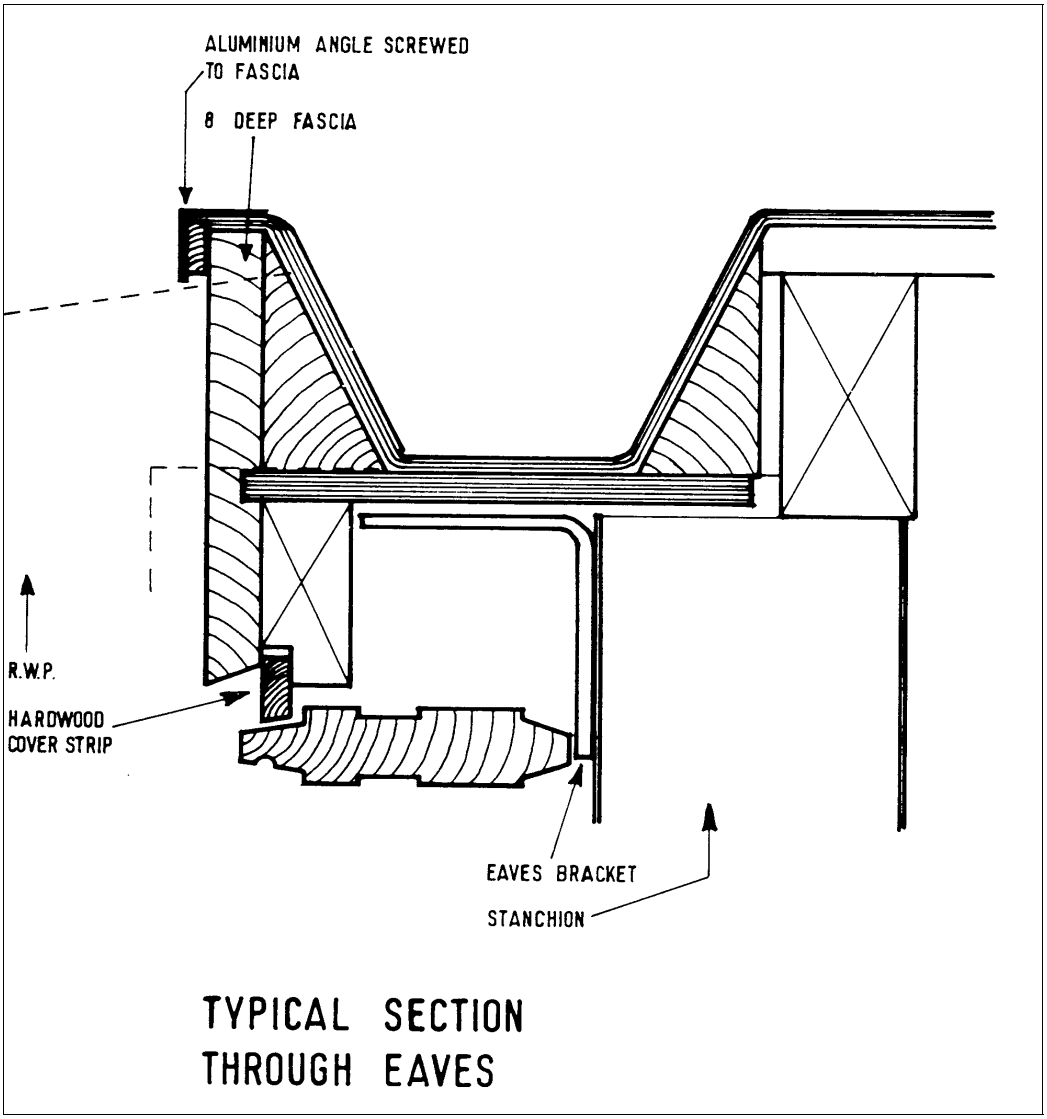

CLASP Mark 3b – 1962/65

CLASP Mark 3b is broadly similar to Mark 3, with the main difference being to the steelwork design.

Minor differences include the following:

EXTERNAL ELEMENTS

Windows: Opening Lights:
Louvres replaced with top hung vents.

Cladding: Concrete cladding units, 2'0" deep, introduced. These were used instead of 1'4" roof filler frames and 8" fascia.
Profiled aluminium sheet cladding used on a limited number of projects.

Eaves: Extruded aluminium section used as edge trim to top of fascia, replacing simple aluminium angle.

CLASP MARK 3B - EAVES DETAIL

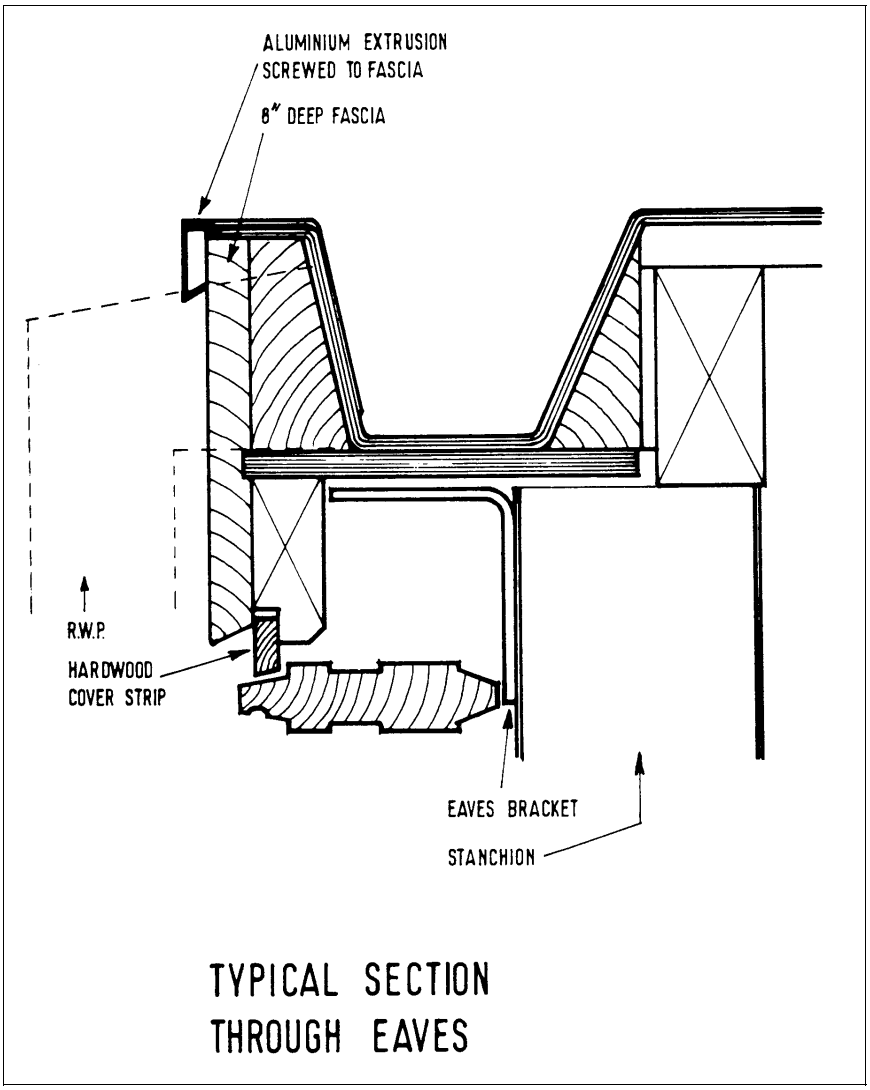

CLASP Mark 4 – 1965/69

Dimensional changes. Most noticeable on elevations, Mark 4 based on 3'0", 6'0" and 9'0" compared to Mark 3/3b based on 3'4", 6'8" and 10'0".

EXTERNAL ELEMENTS

Windows: Timber - painted.
Factory-made frames, either full height or -hole-in-the-wall- units.
Fixed lights and solid panels glazed with **neoprene zipper gaskets.**
Opening Lights:
Vertical Sliding and horizontal sliding windows in mill finish aluminium.
Top hung vents.

Cladding: Concrete cladding units now with a **vertical** emphasis.
Main units 8'0" or 10'0- high (storey heights) by 2'0" wide with 1'0" and 3'0" options. Other size units used for high single storey, under cill units, eaves and floor fillers.
Tile hanging and boarding also used.

Eaves: **Aluminium fascia** used with aluminium edge trim to junction with roofing felt.
R.w.p.'s either internal or external.

INTERNAL ELEMENTS

Ceilings: Either **mineral fibre tiles,** plasterboard, or Asbestolux.

The tiles were normally 2'0" x 4'0" in an exposed aluminium grid, with a 2'0" x 2'0" concealed grid option available.

Partitions: Paramount partitioning used extensively, with an option of laminated plasterboard.
Asbestolux used as an internal lining to window units.
Door frames now stove enamelled steel.

CLASP MARK 4 - WINDOW PROFILES

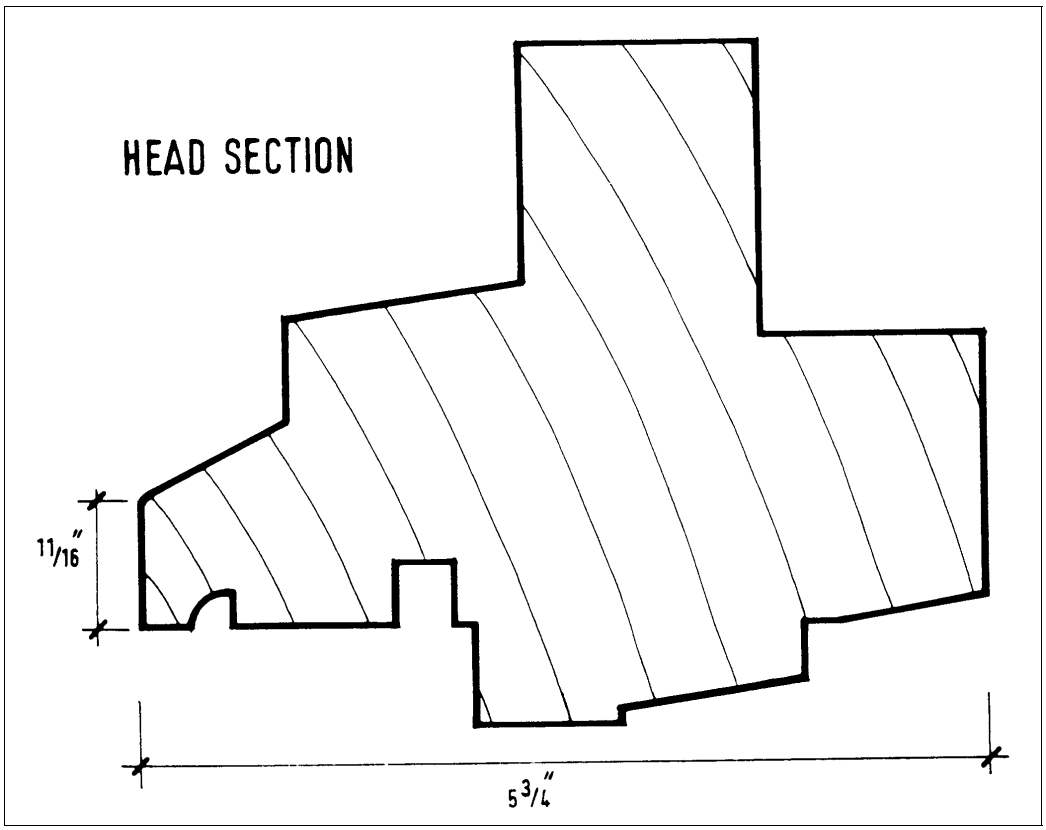

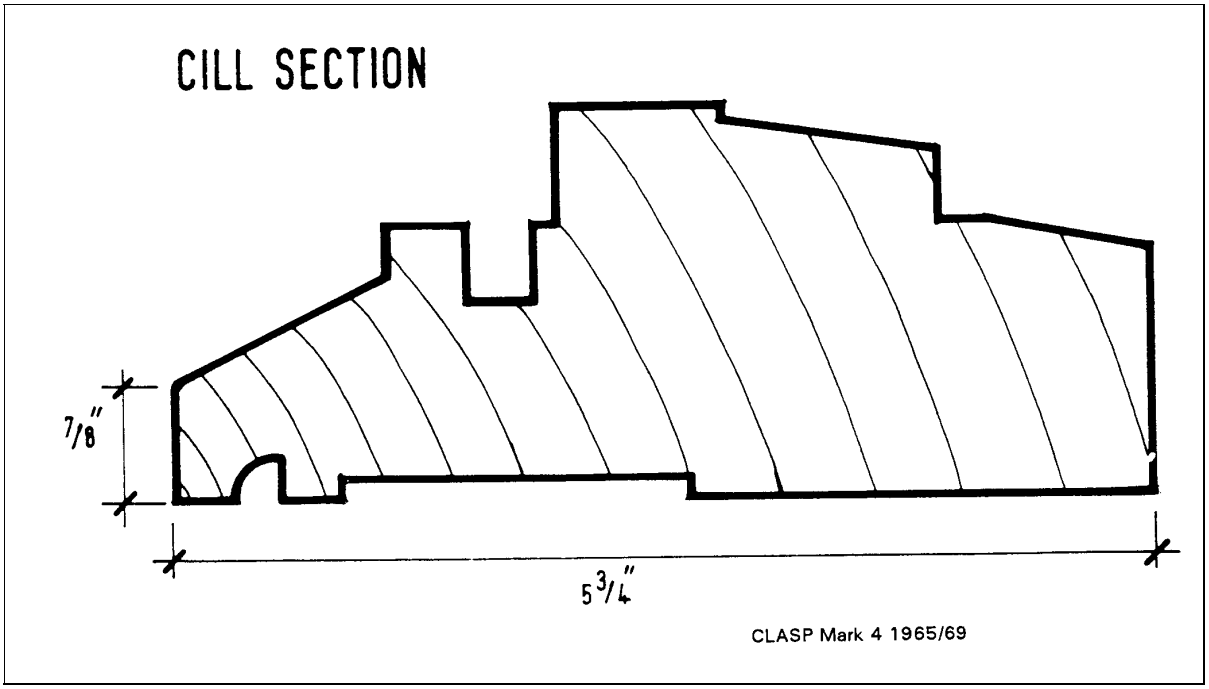

CLASP MARK 4 - WINDOW PROFILES

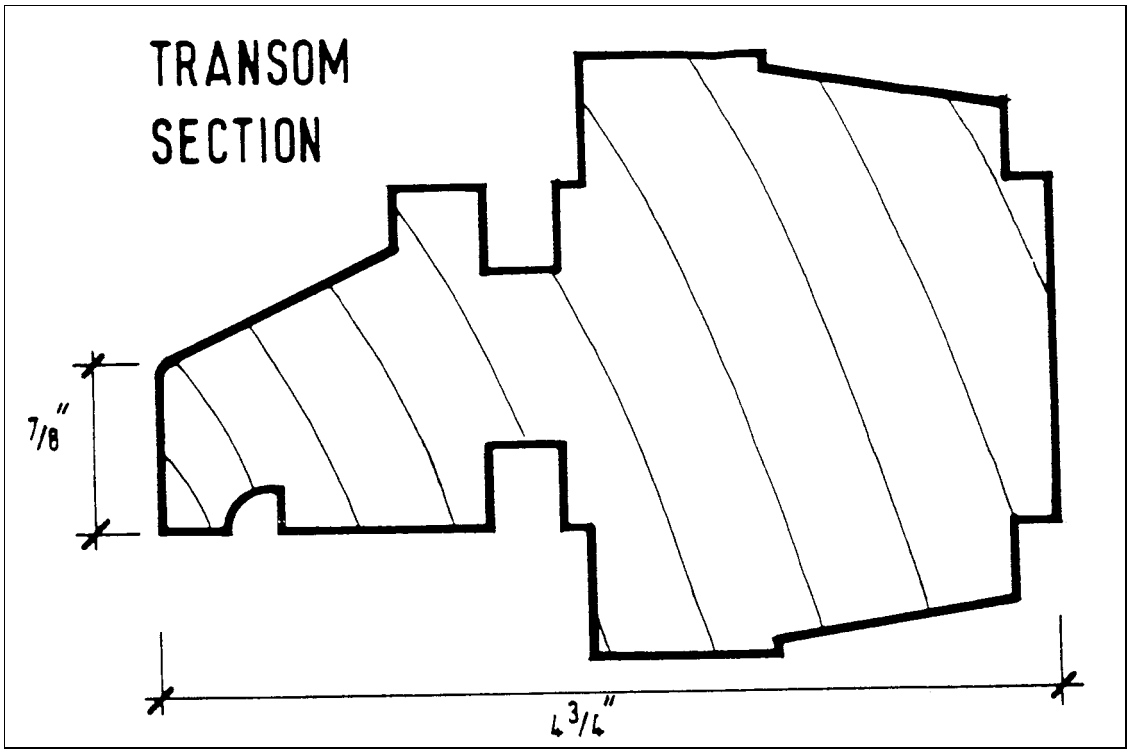

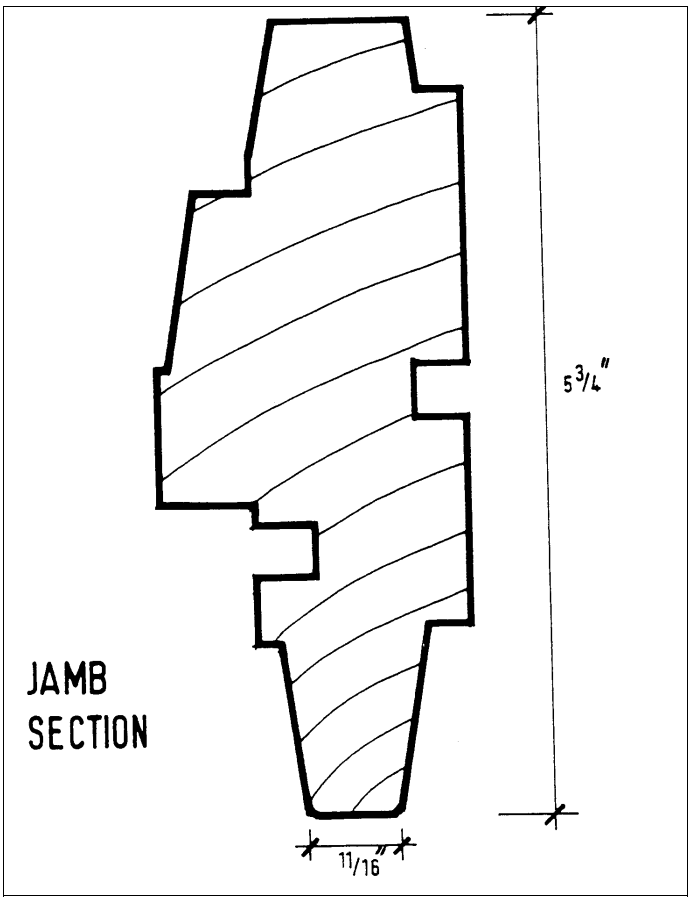

CLASP MARK 4 - WINDOW PROFILES

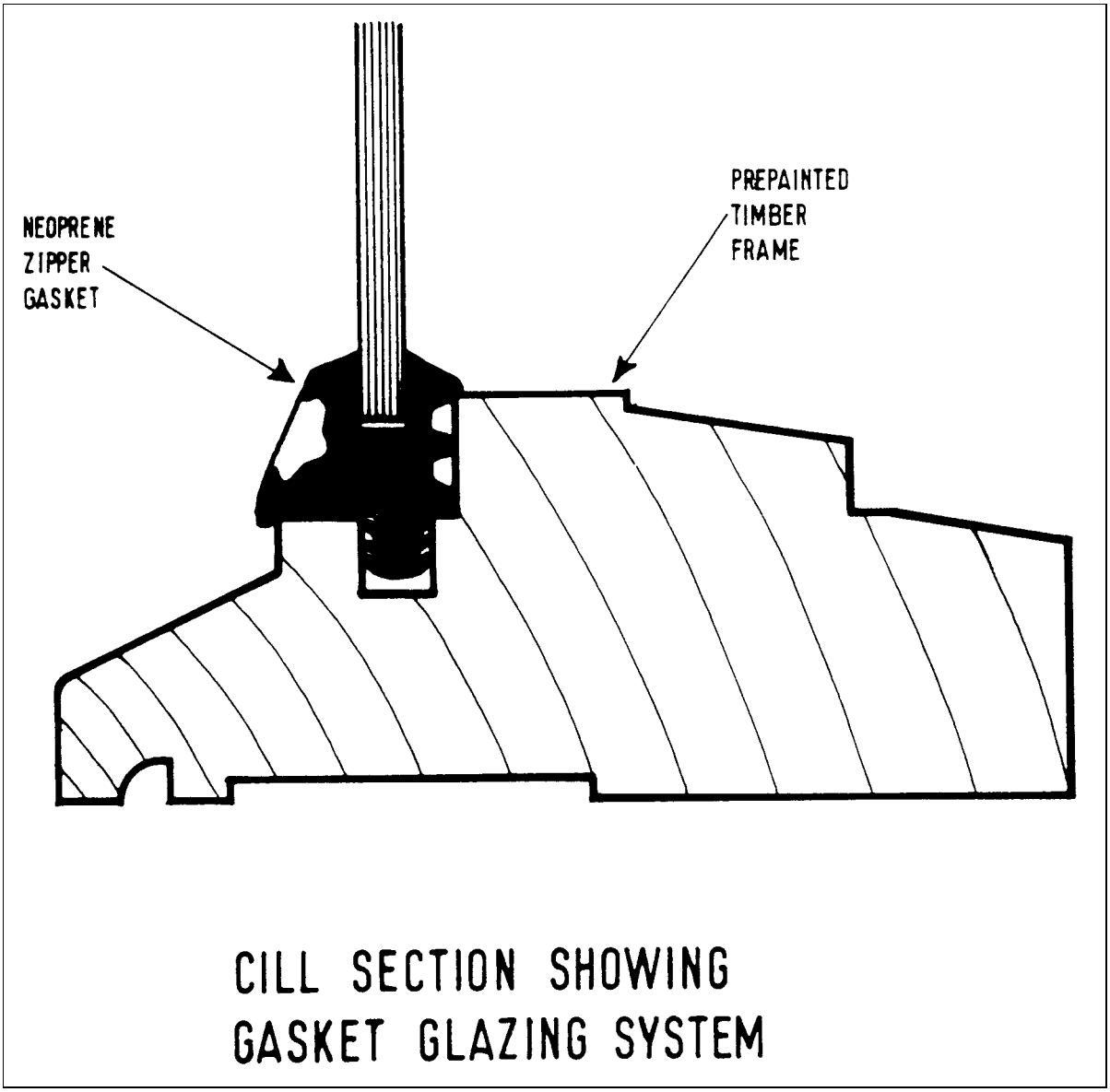

CLASP MARK 4 - EAVES DETAIL

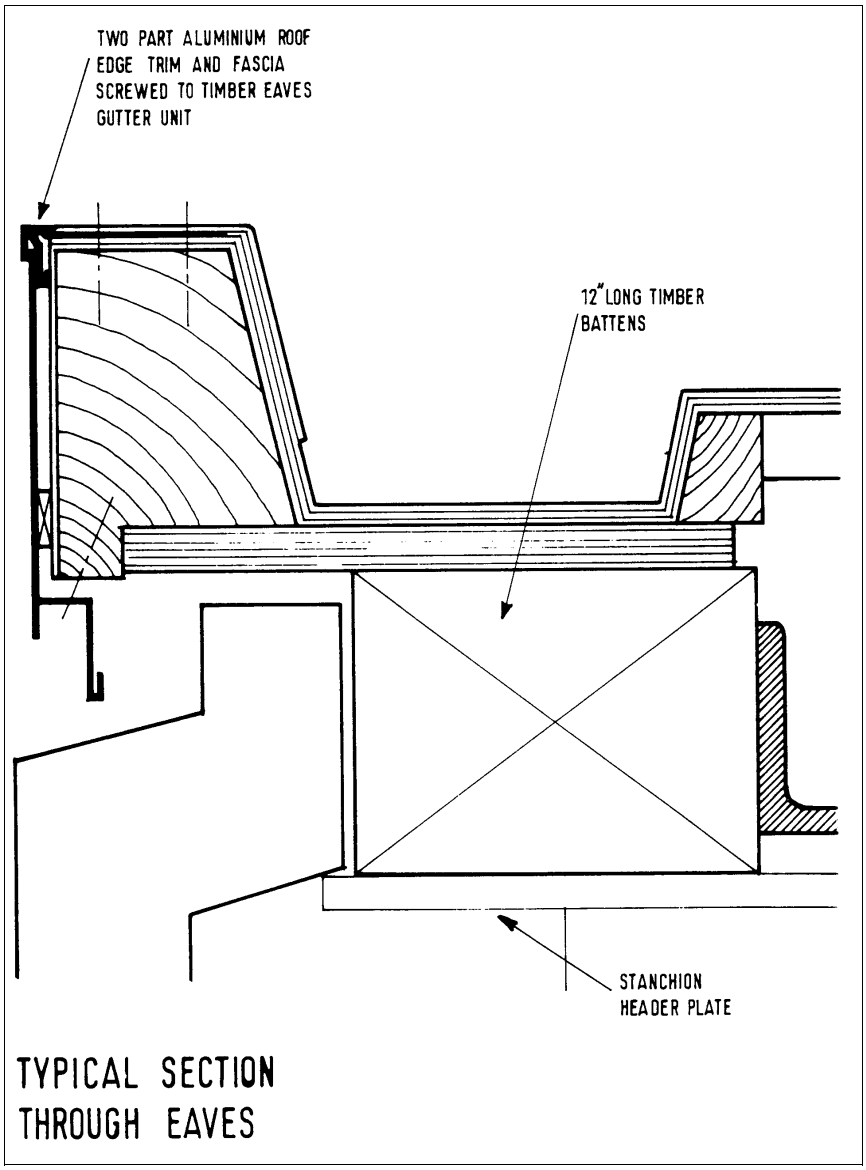

CLASP Mark 4b – 1969/72

CLASP Mark 4b is broadly similar to Mark 4, with the main differences outlined below. There were also changes made to the steel frame design and its relationship to the exernal wall.

EXTERNAL ELEMENTS

Windows: As for Mark 4, except for a change in the design of the timber sections.

Cladding: As for Mark 4, except that a GRP floor/roof filler panel was available.

Eaves: As for Mark 4, except trim and fascia sections changed and short trim available for use with concrete roof filler units.

INTERNAL ELEMENTS

Ceilings: Mineral fibre tiles now 3'0" x 3'0" in an exposed tee system.
Similar size Asbestolux panels also used.
1'0" x 1'0" mineral fibre tiles in a concealed system available.

Partitions: **Stelvetite** partitioning introduced.
This comprises a plastic-faced, steel sheet with plasterboard backing and was used extensively.

CLASP MARK 4b - WINDOW PROFILES

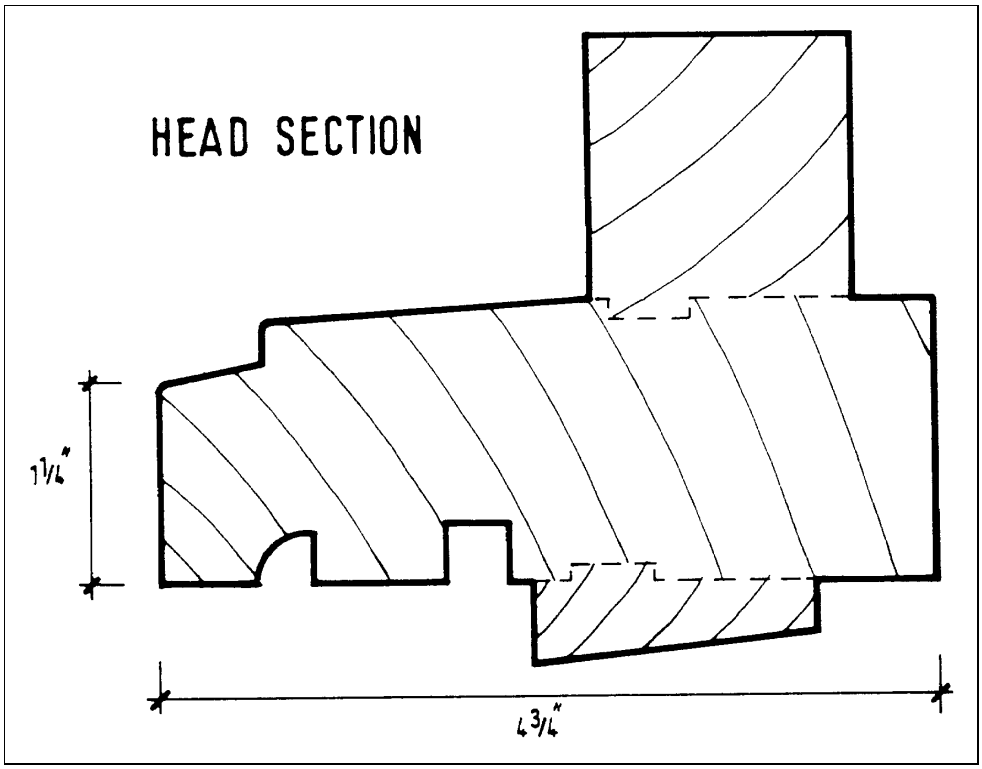

CLASP MARK 4b - WINDOW PROFILES

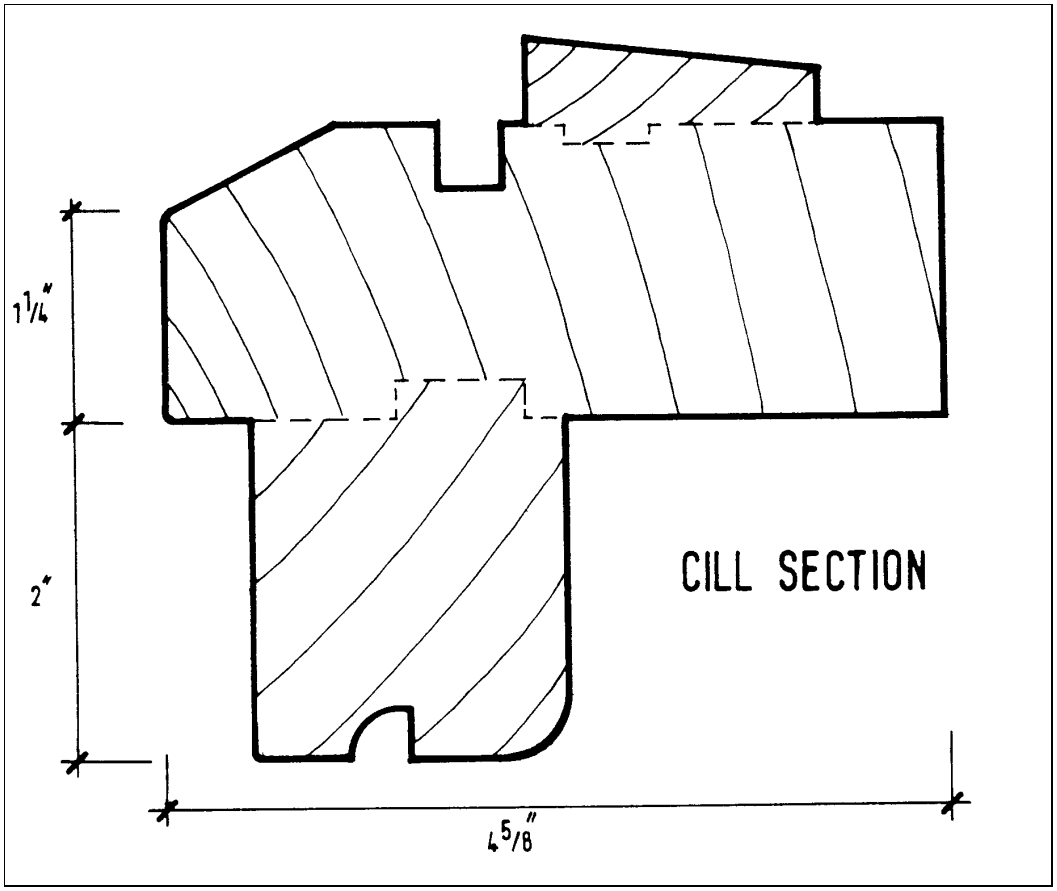

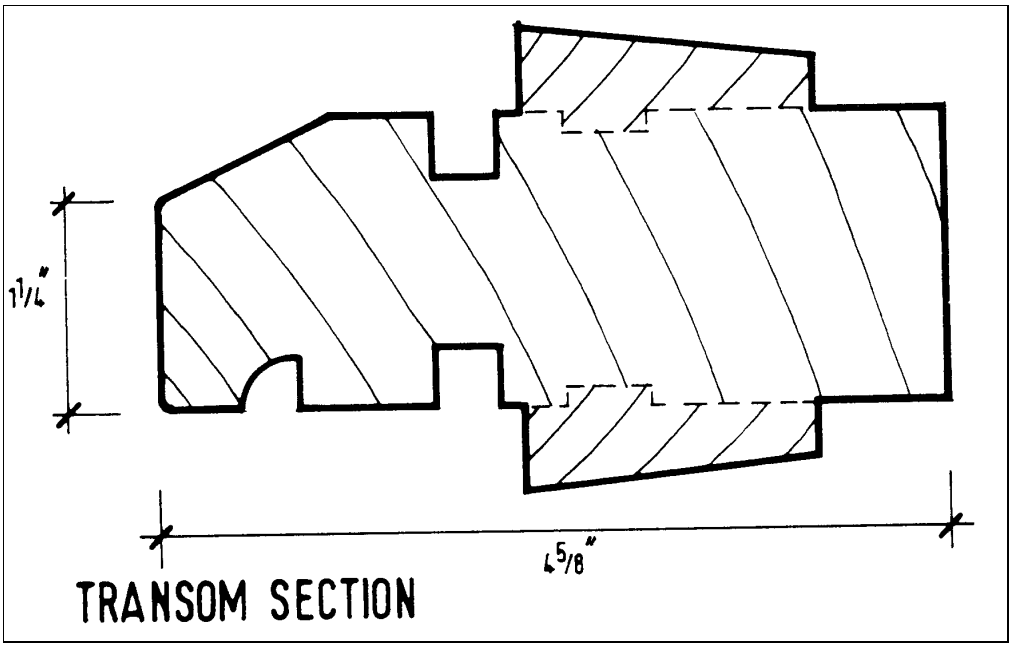

CLASP MARK 4b - WINDOW PROFILES

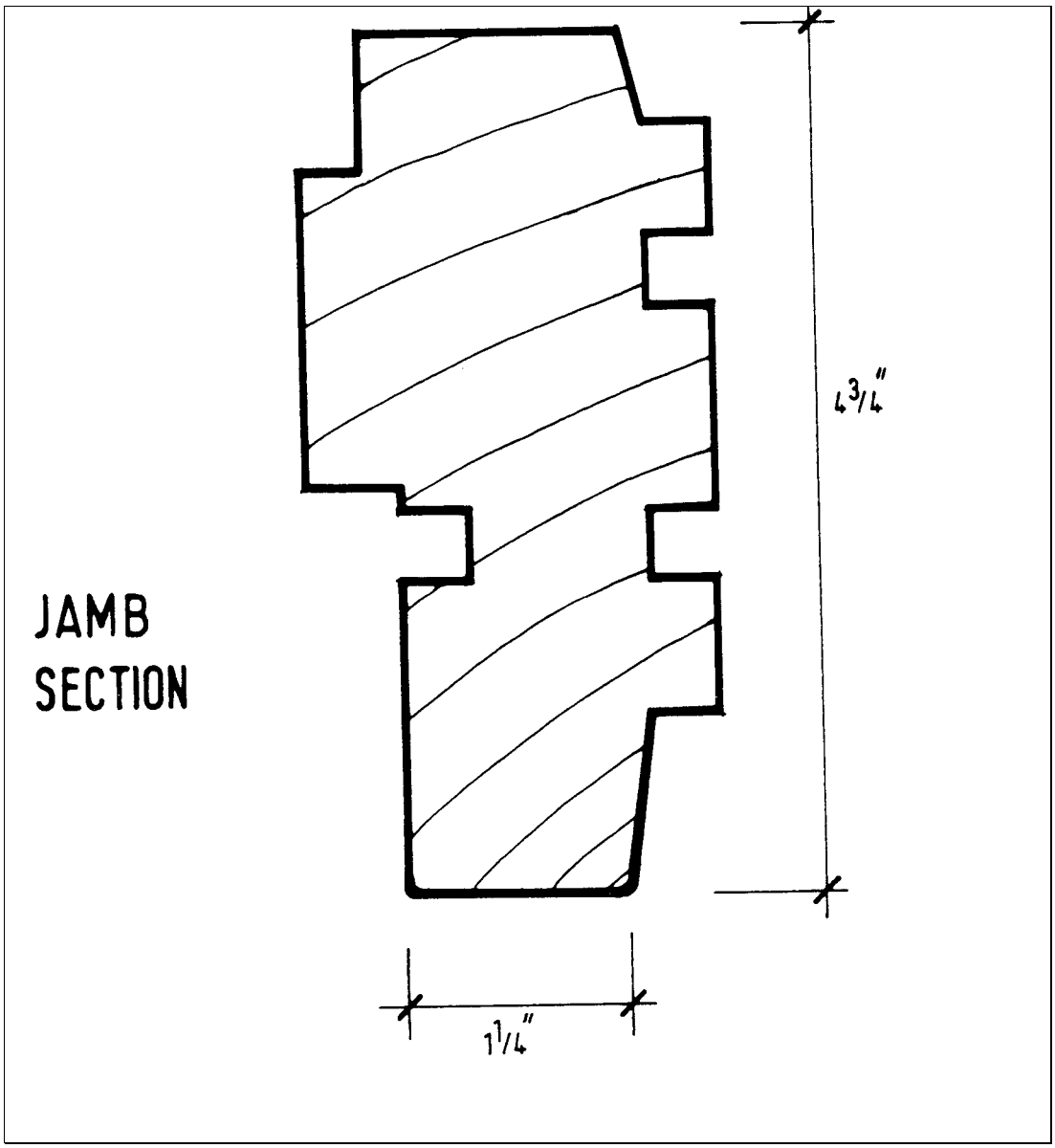

CLASP MARK 4b - WINDOW PROFILES

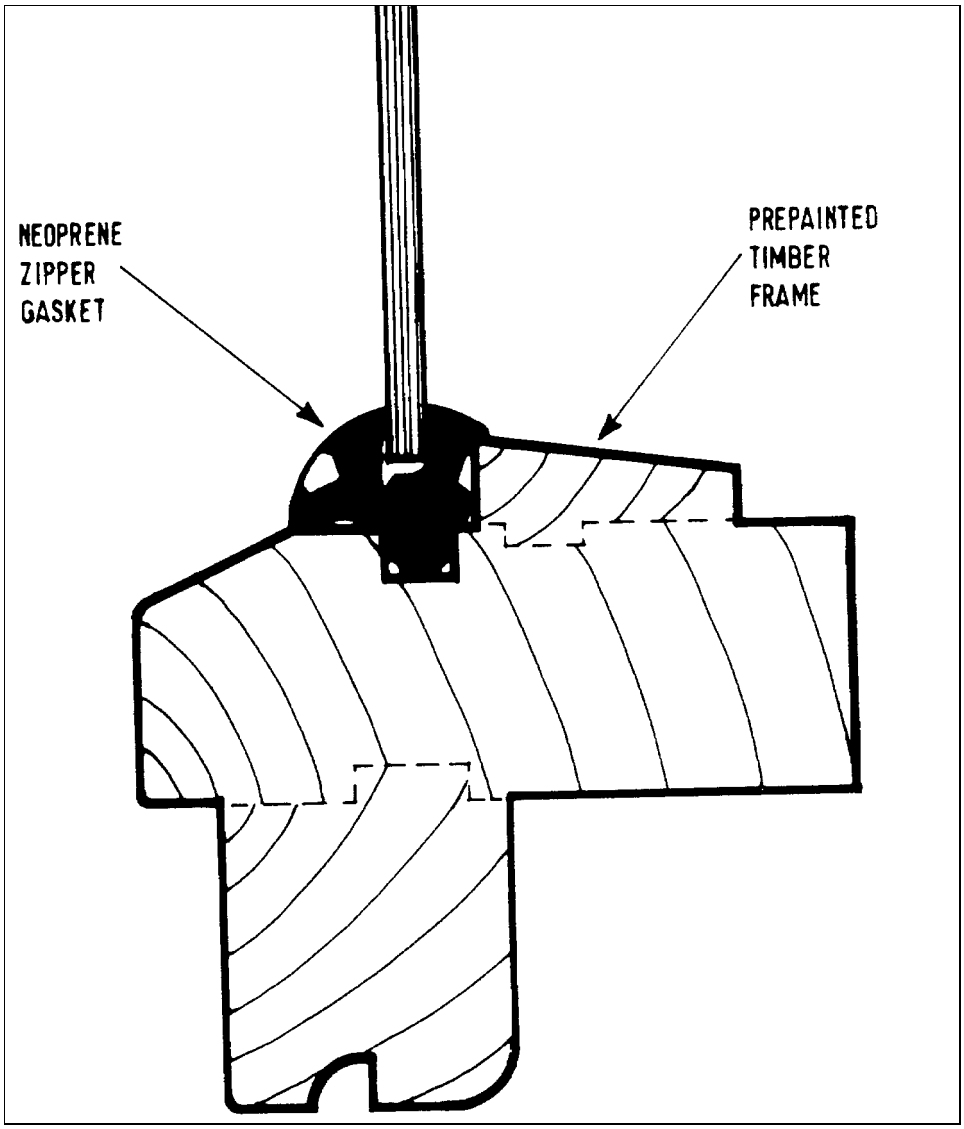

CILL SECTION SHOWING GASKET GLAZING SYSTEM

CLASP MARK 4b - EAVES DETAIL 1

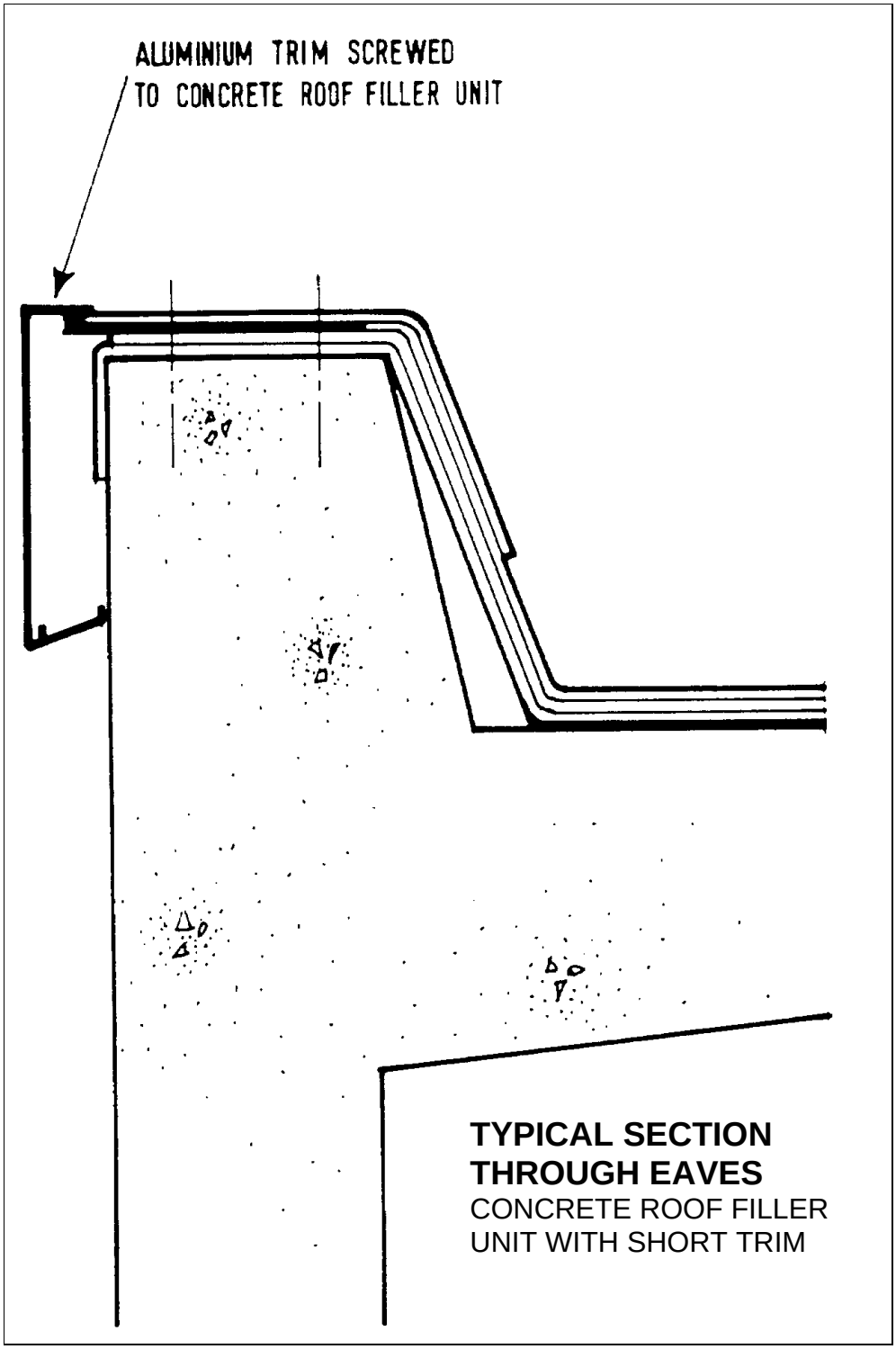

CLASP MARK 4b - EAVES DETAIL 2

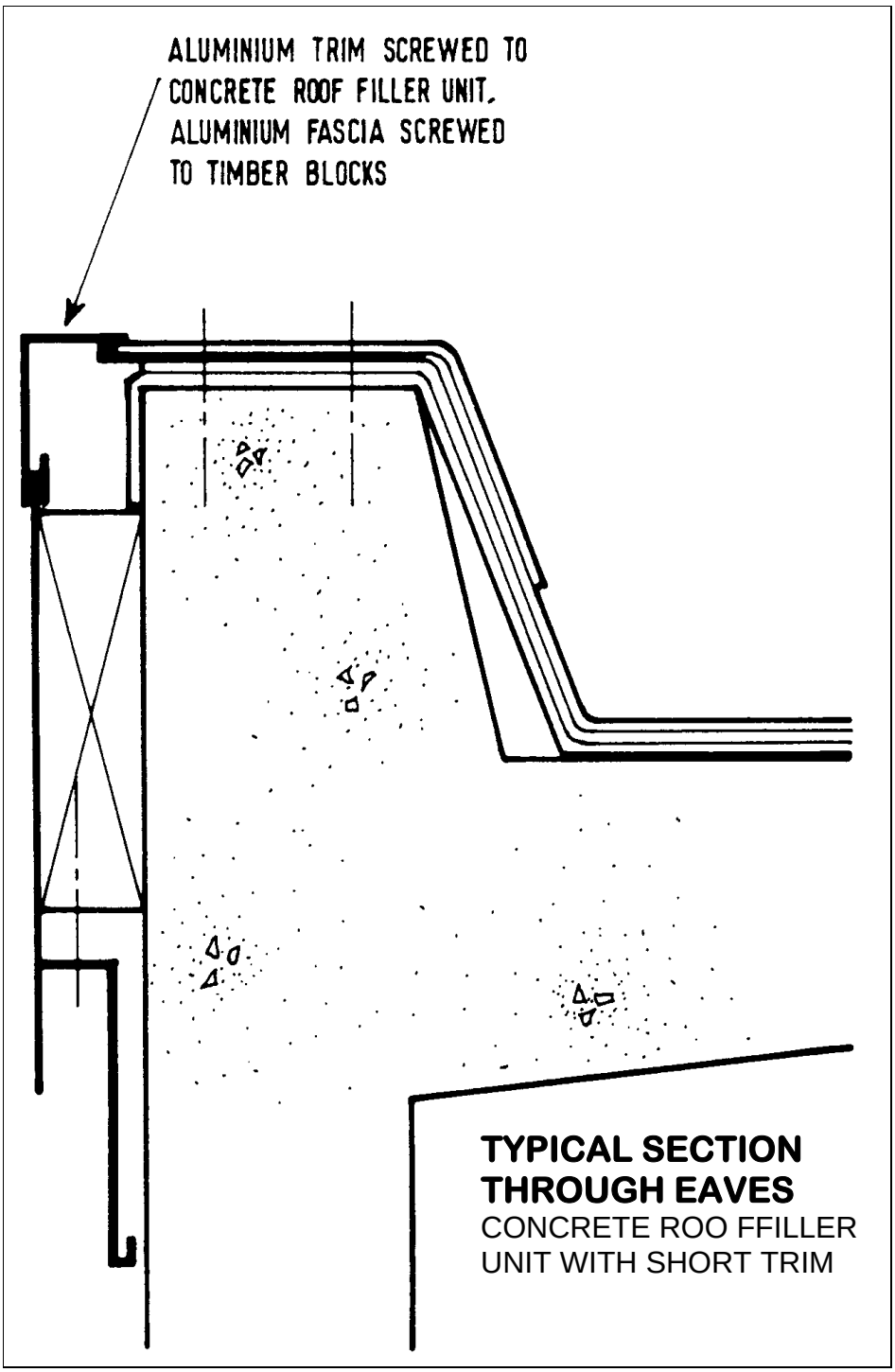

CLASP MARK 4b - EAVES DETAIL 3

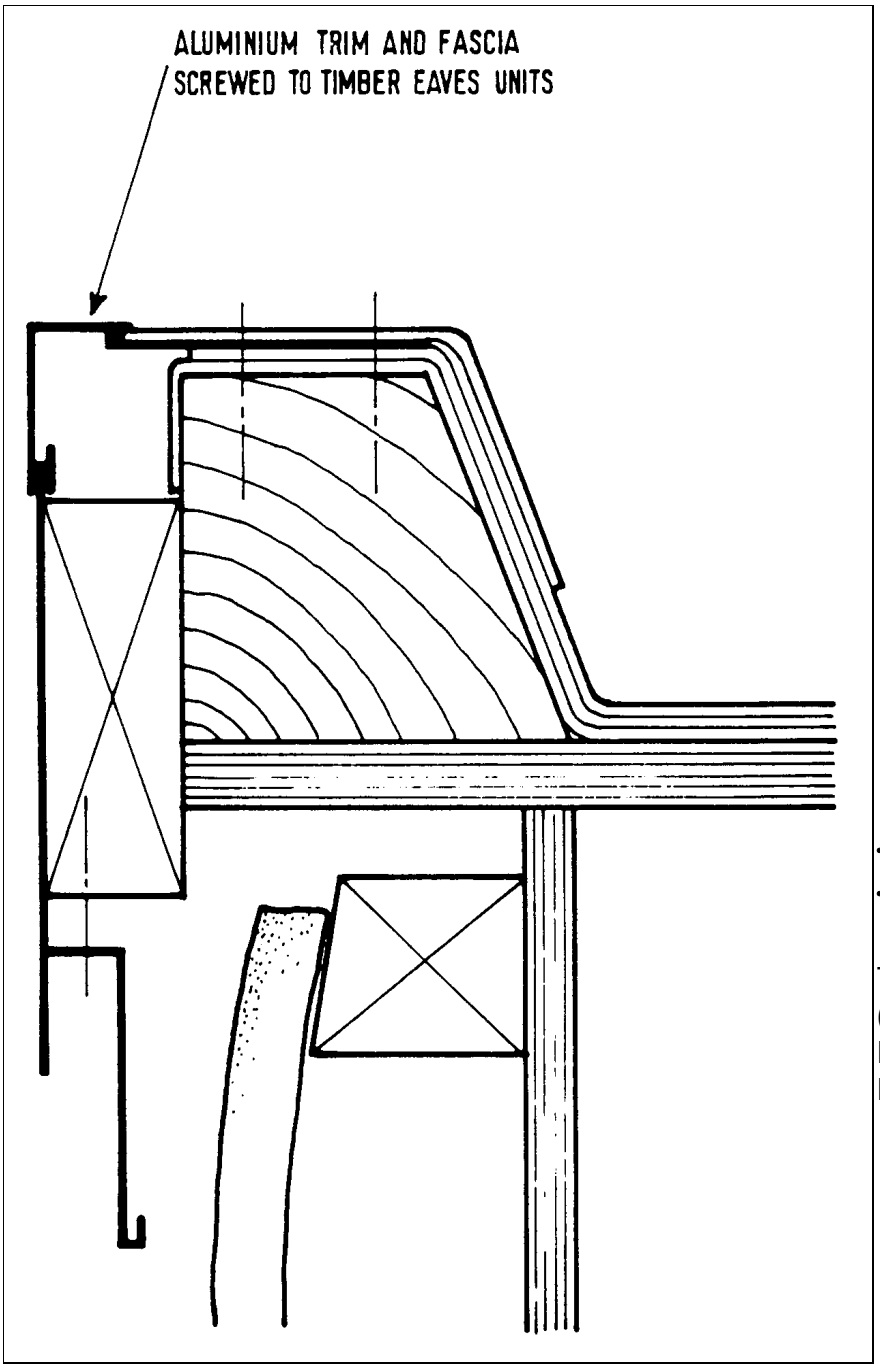

TYPICAL SECTION THROUGH EAVES

TIMBER ROOF FILLER UNIT (TILE HANGING OR GRP PANELS) WITH TRIM AND FASCIA

CLASP Mark 5 – 1972/84

CLASP Mark 5 saw the introduction of the metric system. The dimensions of the system were rationalised and based on a 100 mm module.

EXTERNAL ELEMENTS

Windows: **White p.v.c. sheathed timber** windows and external door frames.
Frames factory-assembled as storey height or "hole-in-the- wall" units.
Fixed glazing and solid panels retained with neoprene gaskets.
Opening Lights:
Horizontal and vertical sliders mill-finished aluminium.
Top hung vents either frameless or p.v.c.-sheathed timber.

Cladding: Concrete cladding units similar to Mark 4.
Tile hanging used less than on earlier Marks.
Profiled metal sheeting available.
Brickwork used on some non-subsidence sites, with factory-made brickwork cladding units used on subsidence sites.

Eaves: Aluminium eaves trim with an aluminium extruded fascia, except where concrete panels or window frames are taken full height. These have the eaves trim only.
R.w.p.'s taken internally.
Note: A number of pitched roof projects were undertaken towards the end of Mark 5.

INTERNAL ELEMENTS

Ceilings: Mainly mineral fibre tiles, 900 x 900 mm in an exposed grid suspension system, with 600 x 600 mm available with a concealed grid system. In areas of high humidity Asbestolux tiles were used (later Supalux).
Coffered ceiling design available.

Partitions: Stelvetite partitioning used extensively.
Plasterboard or Sundeala faced plasterboard also used.
Door frames as for Mark 4.

CLASP MARK 5 - WINDOW PROFILES

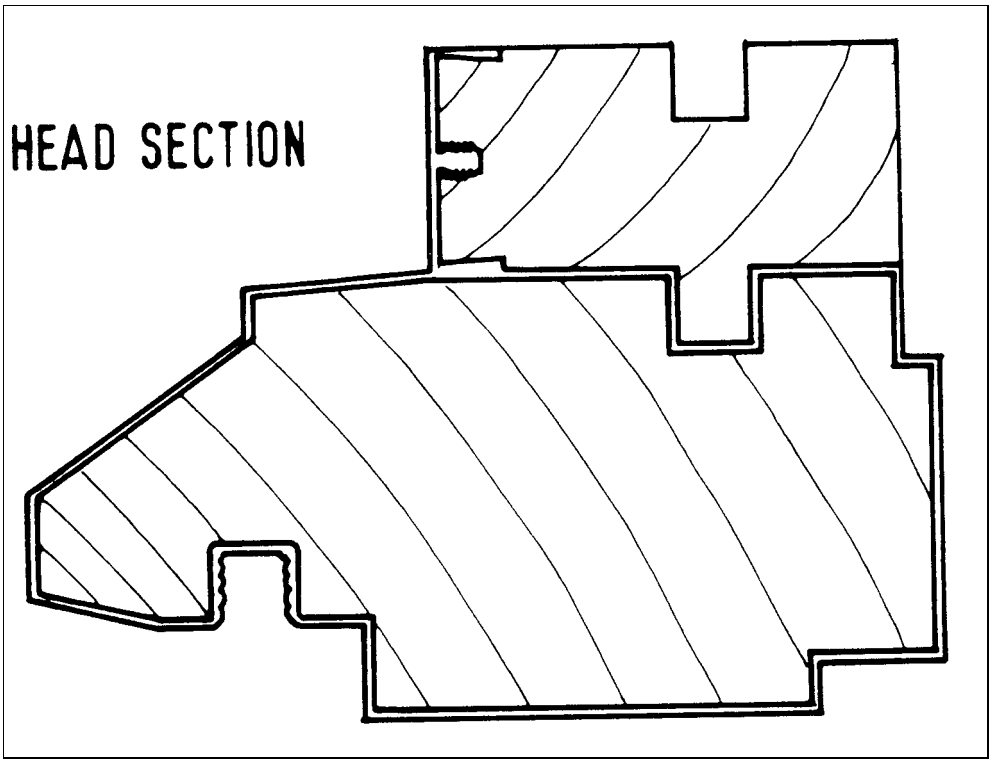

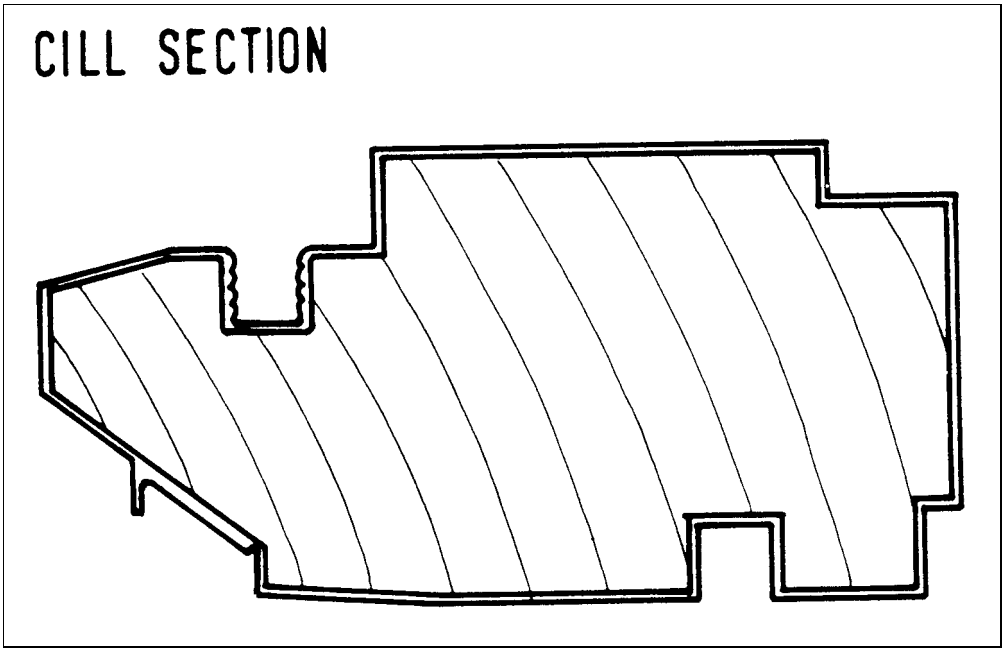

CLASP MARK 5 - WINDOW PROFILES

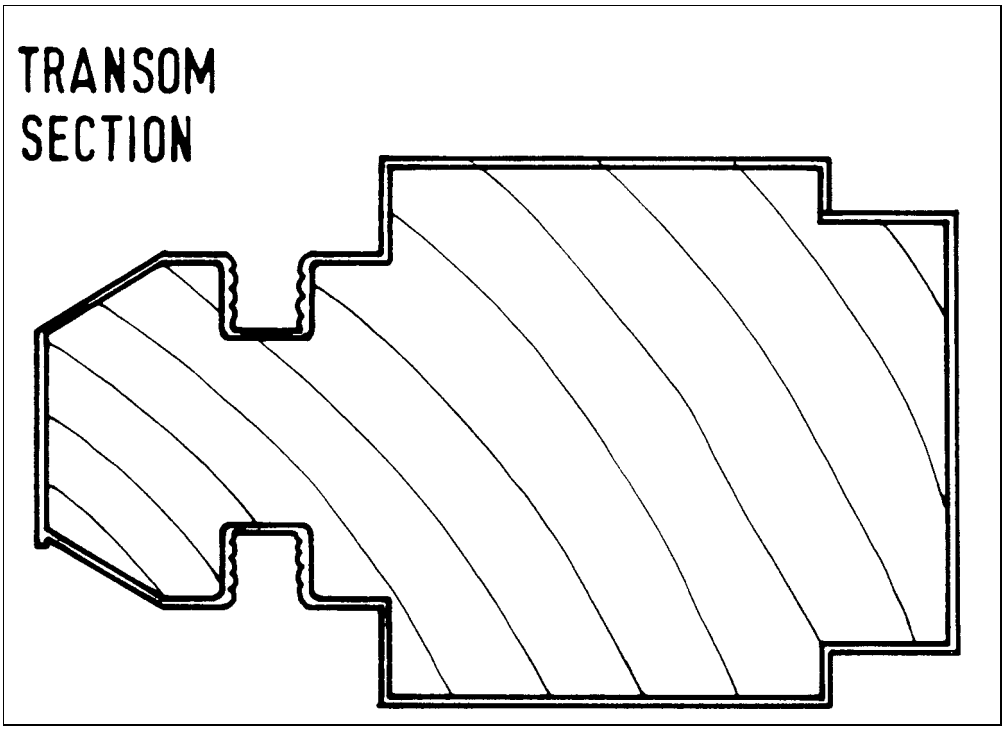

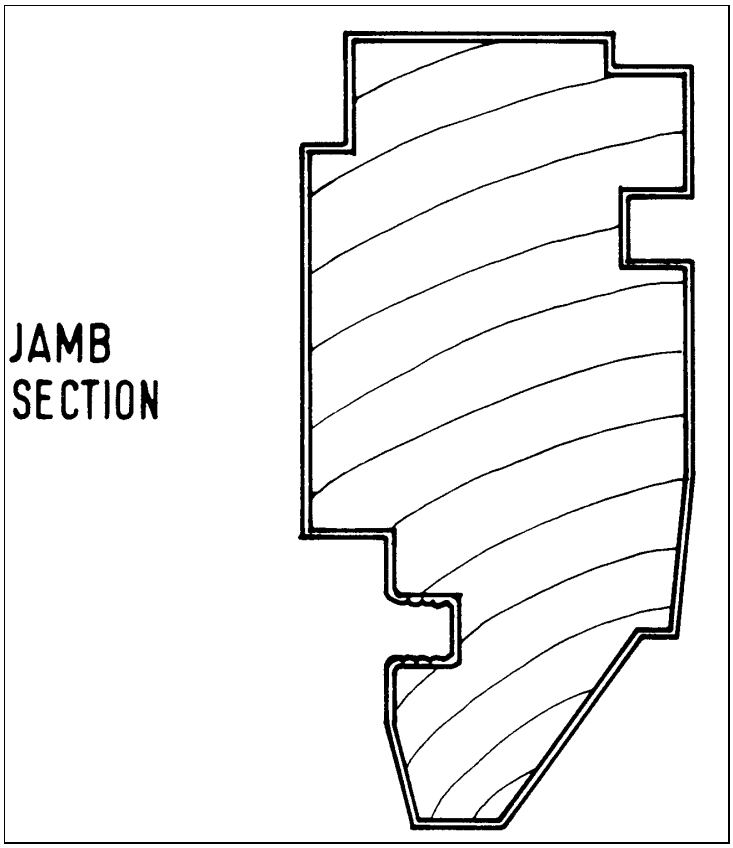

CLASP MARK 5 - WINDOW PROFILES

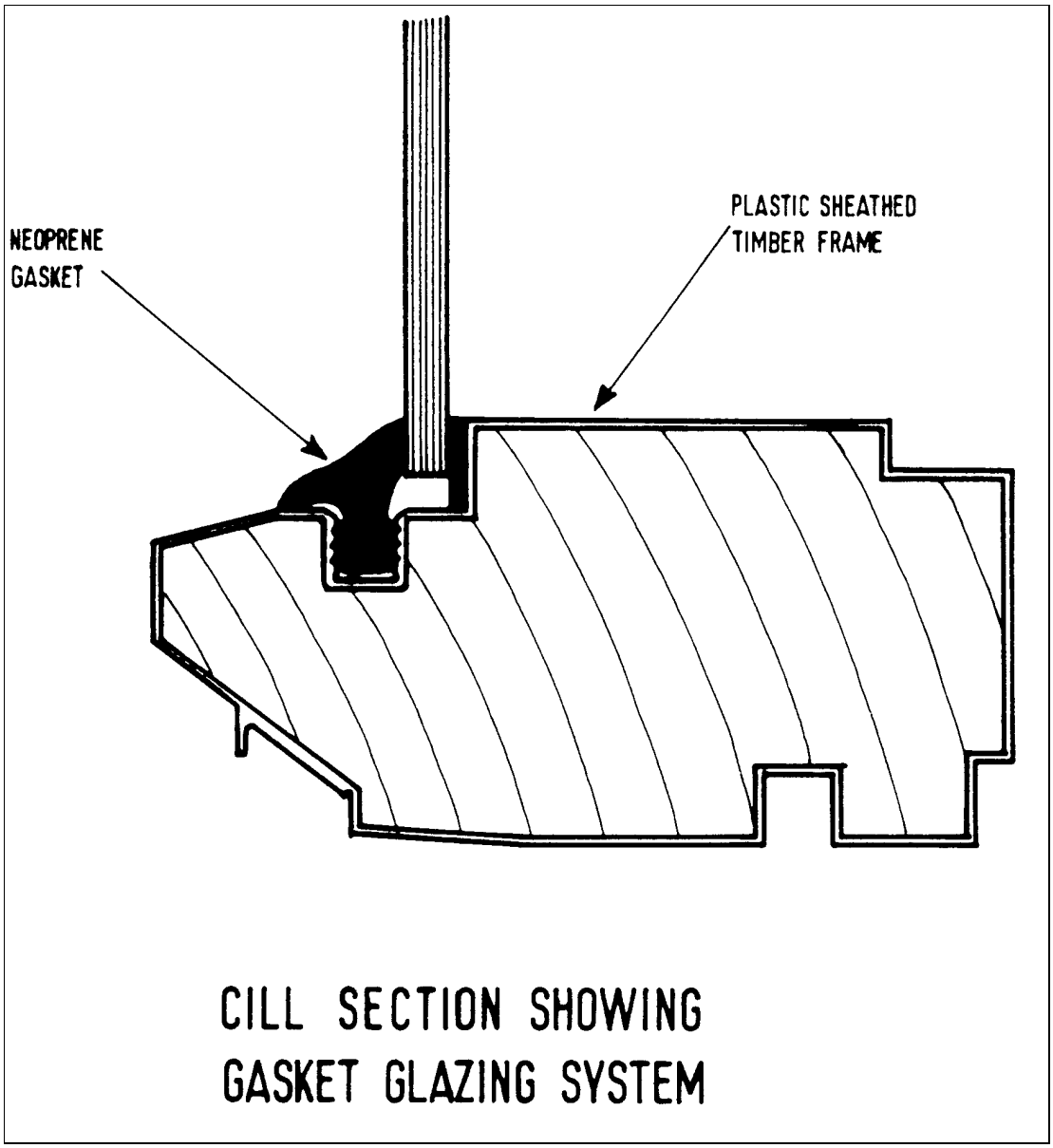

CLASP MARK 5 - EAVES DETAIL 1

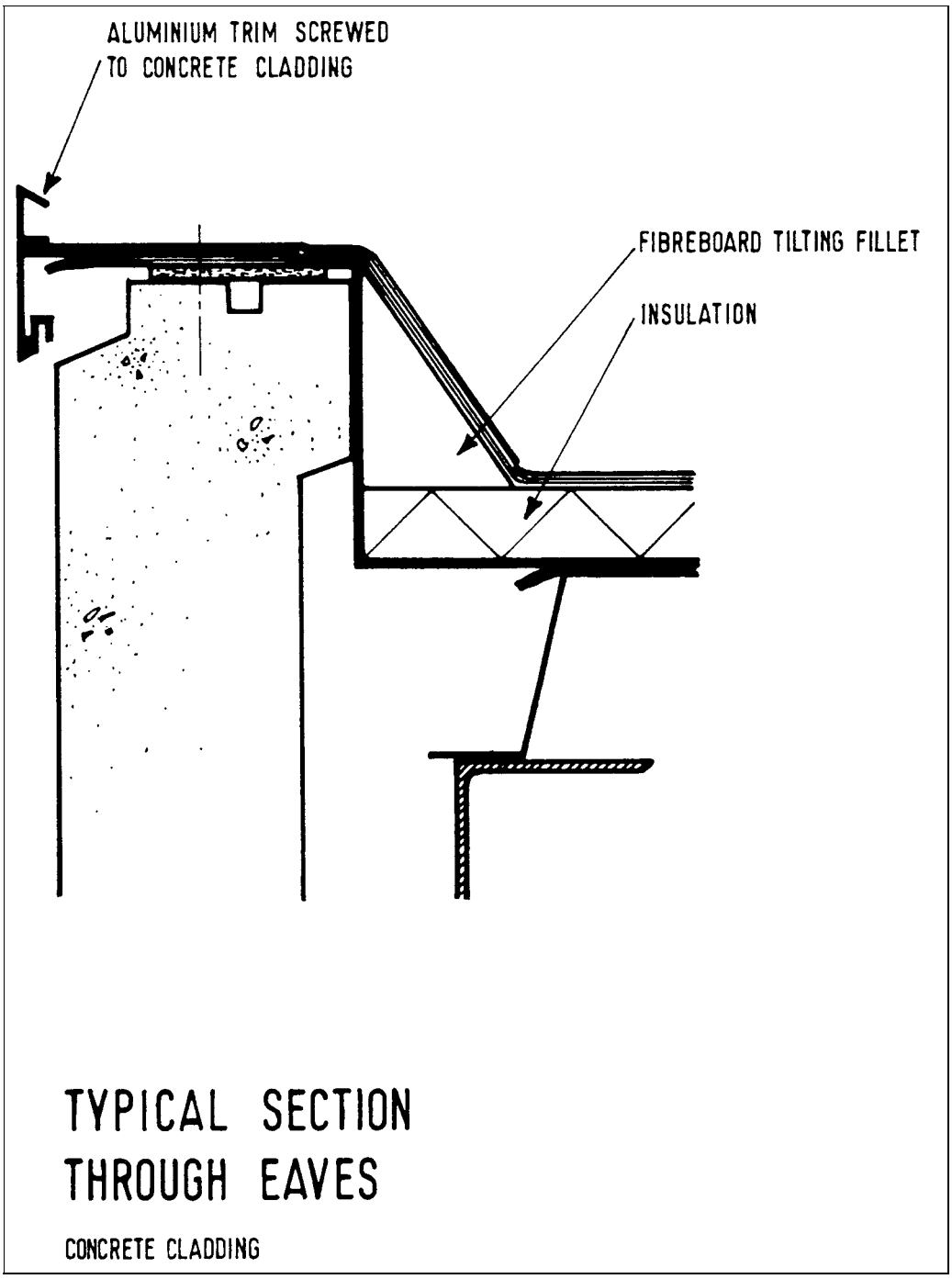

CLASP MARK 5 - EAVES DETAIL 2

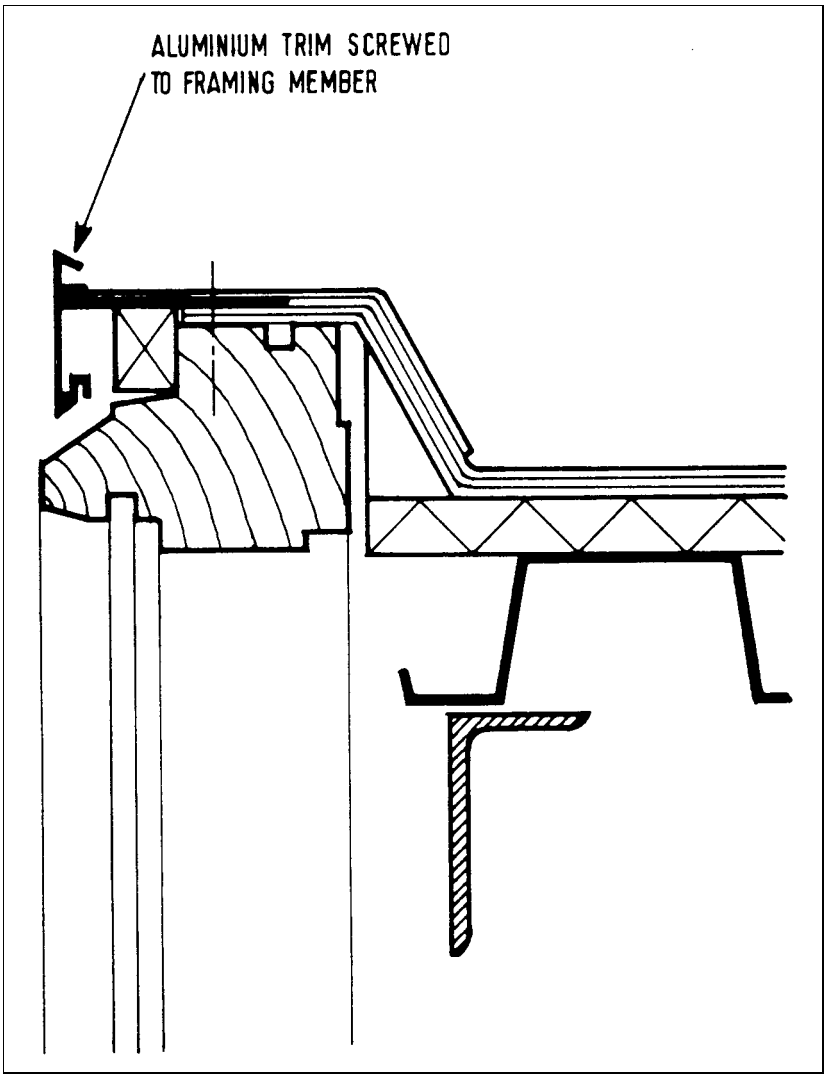

TYPICAL SECTION THROUGH EAVES
FRAMED ROOF FILLER UNIT

CLASP MARK 5 - EAVES DETAIL 3

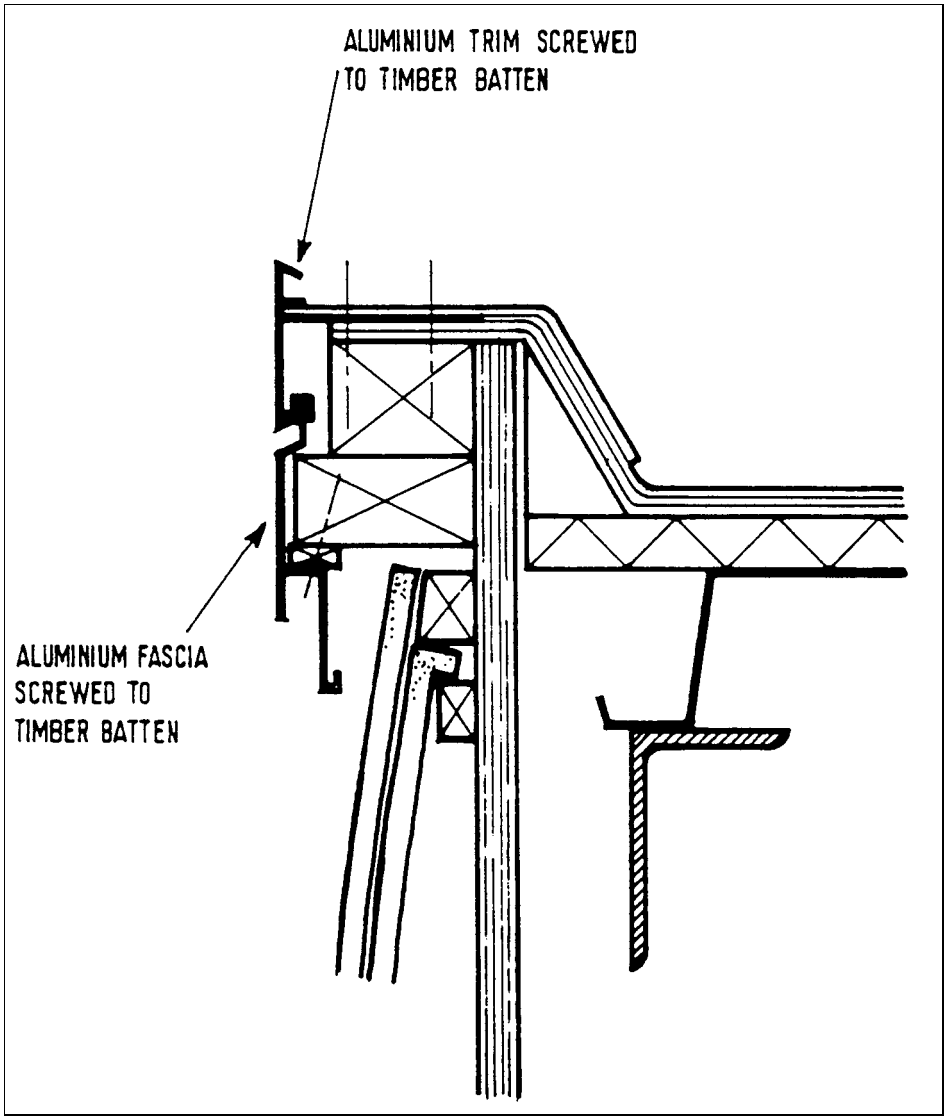

TYPICAL SECTION THROUGH EAVES
TILE CLADDING